AhmGuard®

# Timber doorset with seamless integral finger protection

The ideal solution for schools

## Eliminating Risk

Thousands of people trap their fingers in doors every year, which can cause serious injury and often results in the need for surgery. This is particularly true in environments where young children are present such as primary schools and nurseries, but also in hospitals, care homes and leisure centres.

**Every year 30,000 children trap their fingers in doors, with more than 1,500 of these needing surgery.**

The Royal Society for the Prevention of Accidents (RoSPA)

### The Necessity for Finger Guards in Spaces Used by Young Children

The Department for Education's Design Brief (December 2023) states that new doors in all areas used by young children should have finger guards. The design brief states;

**5.8 Finger Guards**

**5.8.1** Finger guards shall be fitted to all doors to all spaces used by Early Years and Key Stage 1 pupils, and in any space identified for SEN, where it is very likely for pupils to be present (i.e. spaces that are categorised as Basic Teaching, Learning Resources or Halls, Dining and PE as defined in BB103 or BB104).

**5.8.2** Finger guards shall be provided in non-teaching spaces if required in the School-Specific Brief (SSB).

**5.8.3** Where new doors require finger guards, the guard mechanism shall be either built into the door and frame, with a rounded stile, or surface fixed to the door face and frame. In both cases they shall comply with Classification Class 2 as defined in Table 1, BS 8613:2017 - 'Finger protection devices for pedestrian doors'.

## AhmGuard Offers an Innovative Integral Design

AhmGuard is an innovation in finger protection with its effective, seamless design, incorporating the patent protected finger safe Safehinge pivot system.

The majority of anti-fingertrap solutions are retro-fit and are often unattractive and cumbersome. They work on the premise of covering the gap between the door and frame.

AhmGuard's engineered geometry ensures fingers won't be crushed regardless if the child is standing on the opening or closing side of the door. The smooth curve is an integral part of the timber doorset rather than an add-on feature. AhmGuard's discreet and ergonomic solution forms part of the full doorset and allows the customer to select from a wide choice of timber veneer and high pressure laminate options to achieve the perfect aesthetics for the building.

### Disadvantages of Low Cost Plastic Retro-Fit Finger Protection

- They are prone to damage/vandalism and frequently need replacing.
- Their tactile quality leads to children being tempted to tamper with them.
- They add to the opening force of the door, which should remain below 30 newtons.
- They require additional install time.
- They are bulky in design.

## Sustainability

AhmGuard is one of the most environmentally friendly finger protection solutions on the market. It is manufactured from FSC®-certified (FSC C018847) and other controlled materials.

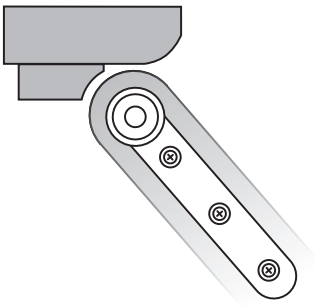

## Fully Certified

AhmGuard has been tested to the British Standard BS 8613:2017 "Finger Protection Devices for Pedestrian Doors". The solution met the more onerous Class 2 of the standard, which assesses the device's ability to prevent fingers entering the gap between the door and frame when force is used. Class 1 devices do not undergo this part of the testing. Our doorsets are also certified for fire performance under the BM TRADA Q-Mark Fire Door Manufacture scheme.

| | |
|---|---|
| **Door Type Suitability** | Single or double doors (single action)<br>Internal doors of 44mm thickness |
| **Fire Rating** | FD30 doors |
| **Acoustic Rating** | 30 RwdB |
| **Test Evidence** | BS 8613:2017 - Type A, Class 2<br>Primary fire tested in accordance with BS 476 pt22 |
| **Durability** | Cyclic tested to a minimum of 200,000 cycles |
| **Opening Diameter** | 95° |

## Features & Benefits

- Aesthetically pleasing profile - perfect for design-led projects.
- Satisfies performance requirements for; anti-finger-trapping, fire, acoustics and sustainability.
- Negates the need for installers to install retro-fit devices on-site, reducing installation time and the risk of compromising compliance.
- Fully compliant with building regulations.
- Durable, integral solution - cannot be forcibly removed.
- Choice of frame material, including; engineered softwood for primed frames or various lacquered hardwoods such as oak ash, maple and walnut.
- Available in the Ahmarra 'Education Range' as a complete doorset with compatible ironmongery factory installed.

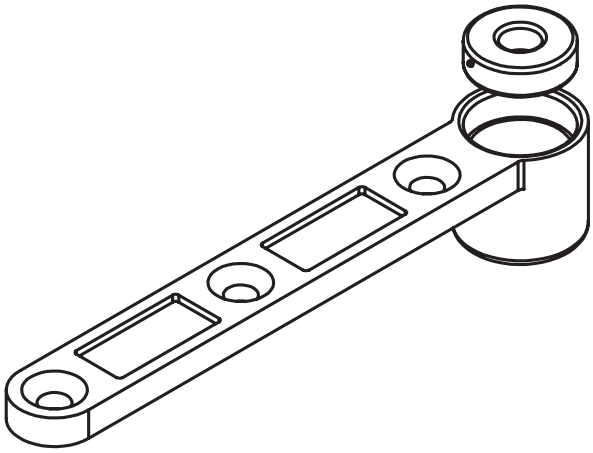

ahmarra

02392 389 076
www.ahmarra.co.uk
Unit 2 Hermitage Park, Harts Farm Way, Havant, Hampshire, PO9 1FA